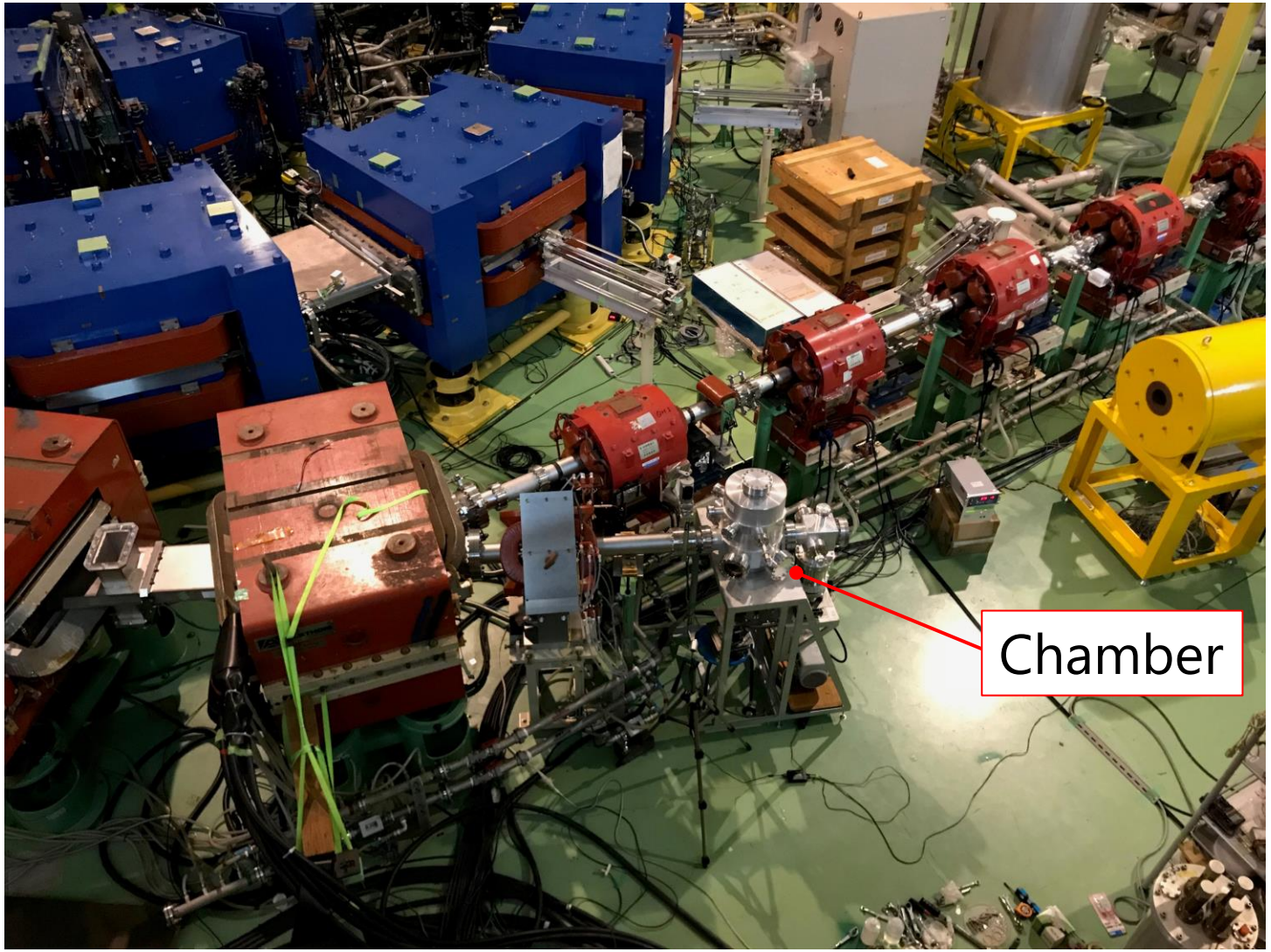
Chamber

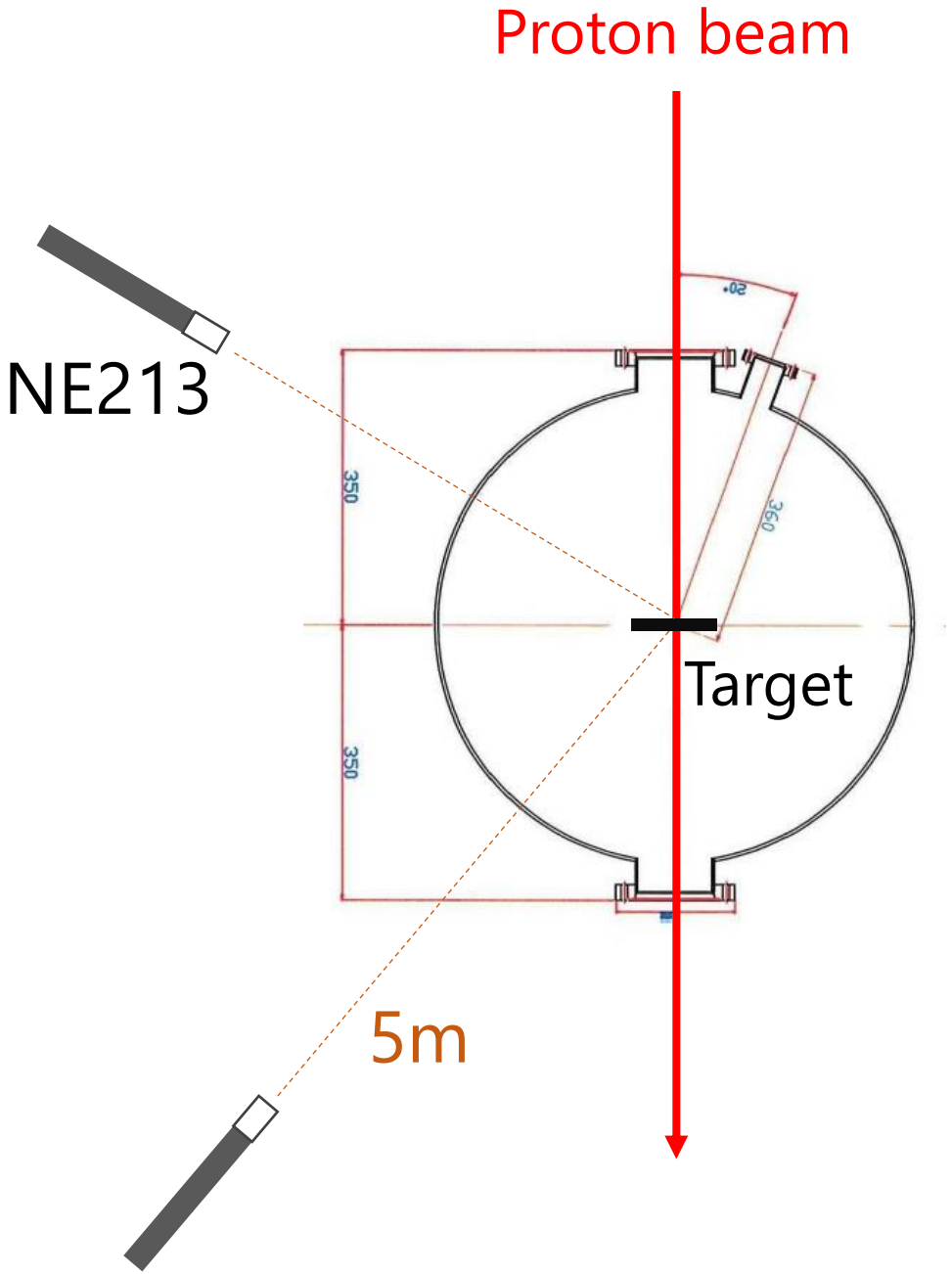
Proton beam
NE213
20°
350
350
350
Target
5m